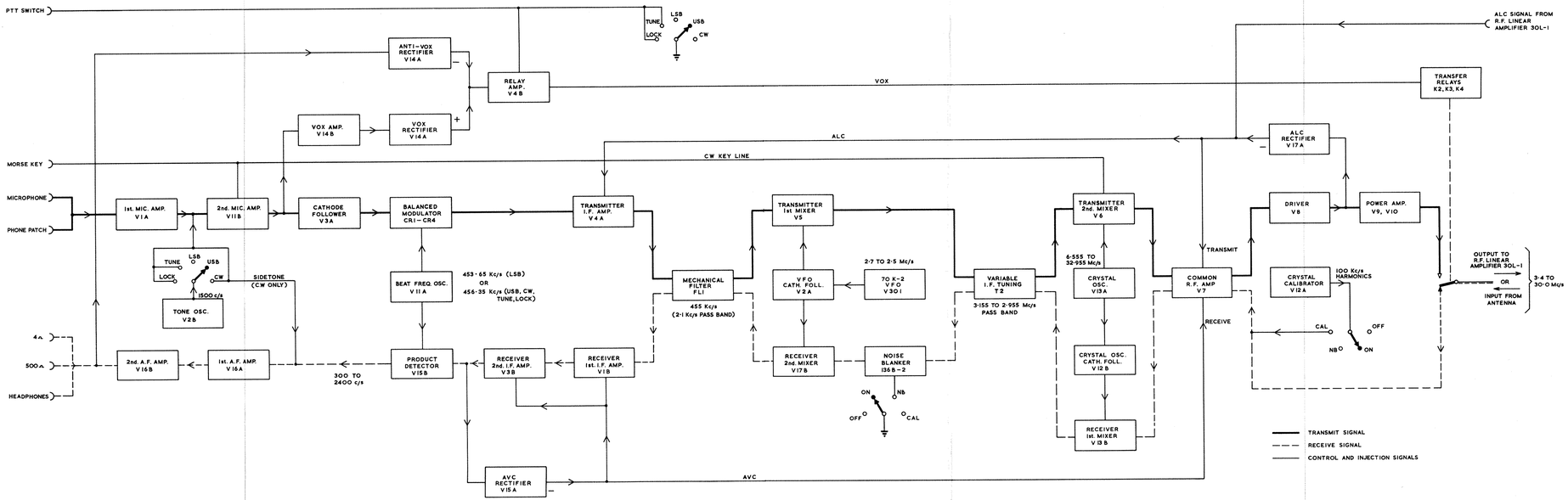

AIR DIAGRAM-MIN
116E-0128-MD9
BY COMMAND OF THE DEFENCE COUNCIL FOR USE IN THE ROYAL AIR FORCE
ISSUE 1 PREPARED BY THE MINISTRY OF AVIATION

Transceiver KWM-2A : block diagram
RESTRICTED

Fig. 7

AIR PUBLICATION -116E-0128 - TGRI (AT) 23183/I COLLINS KWM-2A - From F5TEV - www.ccae.info